STATIONARY HYDRAULIC DRUM DUMPER - HDD-60-10-S

APPROX WEIGHT: 821.57 lbs.
DOES NOT INCLUDE WEIGHT OF POWER OR PACKAGING!!!

ANY ADDITIONS, DELETIONS, OR OMISSIONS MUST BE CORRECTED ON THIS DRAWING AS THIS DRAWING WILL BE CONSIDERED ALL INCLUSIVE

ALL GRAPHICS PROVIDED ARE FOR REFERENCE ONLY. IF CERTAIN DIMENSIONS ARE CRITICAL PLEASE VERIFY THOSE DIMENSIONS WITH YOUR SALESPERSON

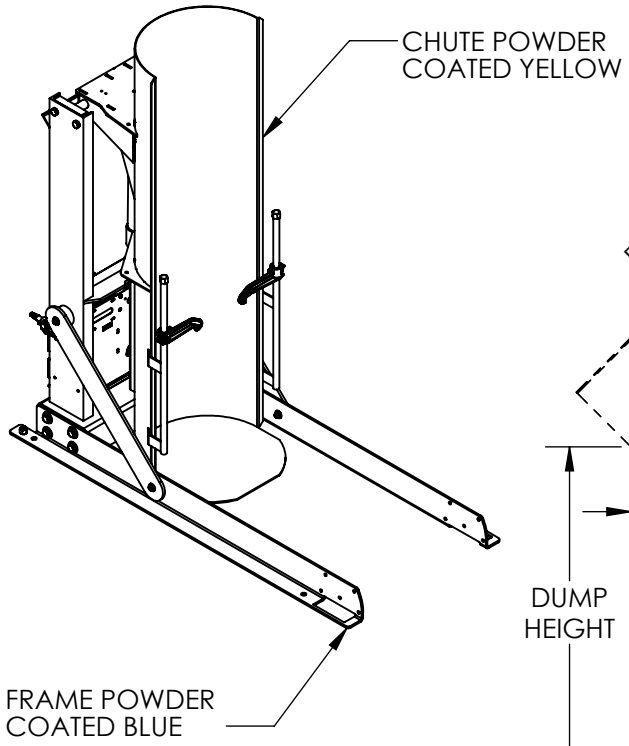

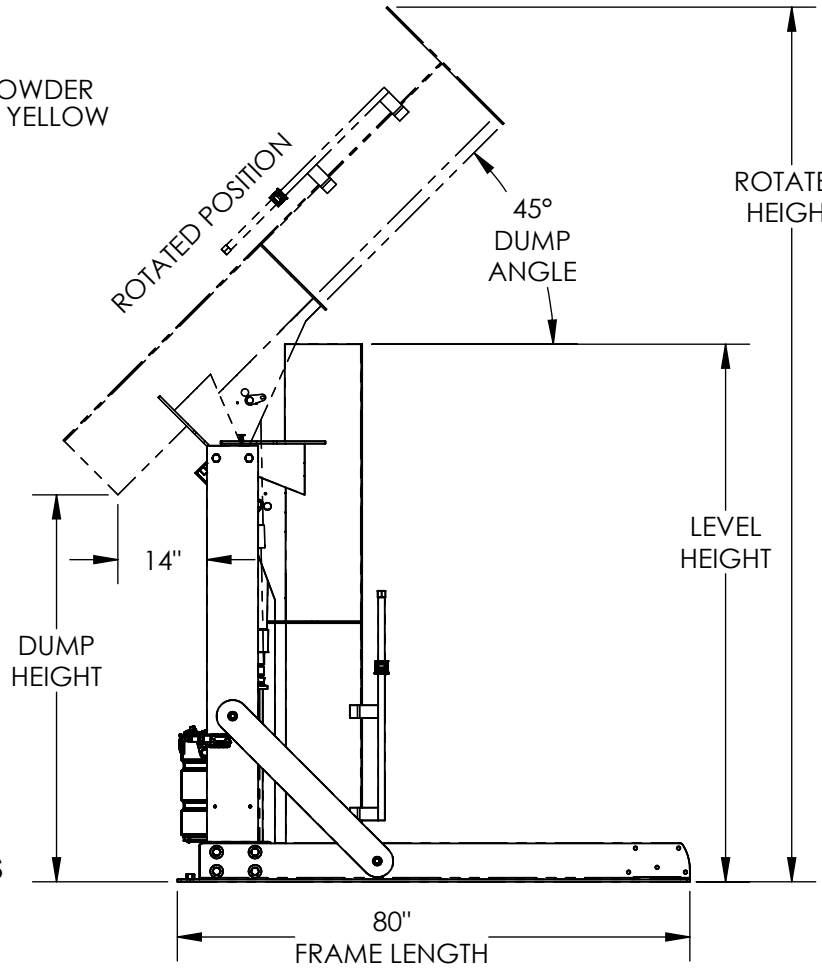

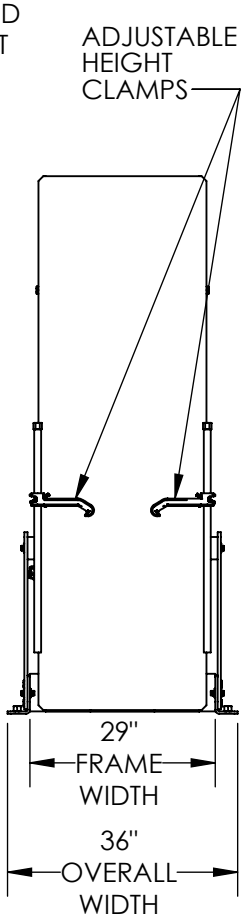

STANDARD FEATURES

MODEL NUMBER IS HDD-60-10-S
OVERALL WIDTH IS 36"
OVERALL LENGTH IS 80"
LEVEL HEIGHT IS 84"
DUMP HEIGHT IS 60"
ROTATION HEIGHT CLEARANCE IS 136 3/4"
UNITS USE A Ø2 1/2" X 18" CYLINDER
DUMP ANGLE IS 45°
MAX CAPACITY IS 1000 LBS.
ALL STEEL CONSTRUCTION
PENDANT HAND CONTROL WITH 8' CORD
ACCEPTABLE DRUM SIZE:
Ø16 1/2" TO Ø23 1/2" (ROUND) X 27 1/2" TO 39 1/2" H (TALL)
BASE POWDER COATED BLUE
CHUTE POWDER COATED YELLOW
TOUGH BAKED IN POWDER COATED FINISH

SPECIAL FEATURES

NONE

FOR INTERNAL USE ONLY PROJECT SIGN OFF	
SALES	
ENG.	
FAB.	
POWER	

DIMENSION TOLERANCE ± 1/4"

3,000 P.S.I. HYDRAULIC COMPONENTS RATING
WARNING: CHECK STATE AND LOCAL CODES !!!
UNIT MUST BE SECURED TO FLOOR BEFORE USE

PLEASE CIRCLE SPECIFICATIONS:

POWER	AC	~~* DC~~	~~* AIR/OIL~~	
MOTOR VOLTAGE	115	~~208~~	~~230~~	~~460~~
DEDICATED CIRCUIT REQUIRED				
MOTOR PHASE	SINGLE	~~THREE~~		
CONTROL	HAND	~~* FOOT~~		
~ ALL BATTERY CHARGERS ARE 115V AC ~				
* BATTERY CHRG.	REMOTE	ON-BOARD		
* CHRG. INDICATOR	YES	NO		

** AVAILABLE AT ADDITIONAL COST*

APPROVAL

I, THE UNDERSIGNED, AGREE THAT THE PRODUCT AS REPRESENTED SATISFIES DESIGN AND DIMENSION REQUIREMENTS. I ALSO ACKNOWLEDGE MY DUTY TO CONFIRM PRODUCT AND INSTALLATION COMPLIANCE WITH ALL APPLICABLE FEDERAL, STATE AND LOCAL REGULATIONS AND STANDARDS.

ANY MODIFIED UNITS ARE NON-RETURNABLE

[ ] As drawn [ ] As marked

Signed:_____ Date:_____

Printed Name:_____

LEAD TIME WILL START UPON RECEIPT OF SIGNED APPROVAL DRAWING

DISTRIBUTOR'S NAME: VESTIL MANUFACTURING		P.O.# X
		W.O.# X
DRAWN BY: CA	DATE: 01/18/2017	SALES: X
REFERENCE: X	SCALE: 1:30	FILE NAME: 09-007-124-001
QUOTED LEAD TIME: X	QUOTE # X	