PORTABLE OFFSET JIB CRANE - JIB-CBX-25-8-10-BC

*** ANY ADDITIONS, DELETIONS, OR OMISSIONS MUST BE CORRECTED ON THIS DRAWING AS THIS DRAWING WILL BE CONSIDERED ALL INCLUSIVE ***

ALL GRAPHICS PROVIDED ARE FOR REFERENCE ONLY. IF CERTAIN DIMENSIONS ARE CRITICAL PLEASE VERIFY THOSE DIMENSIONS WITH YOUR SALESPERSON

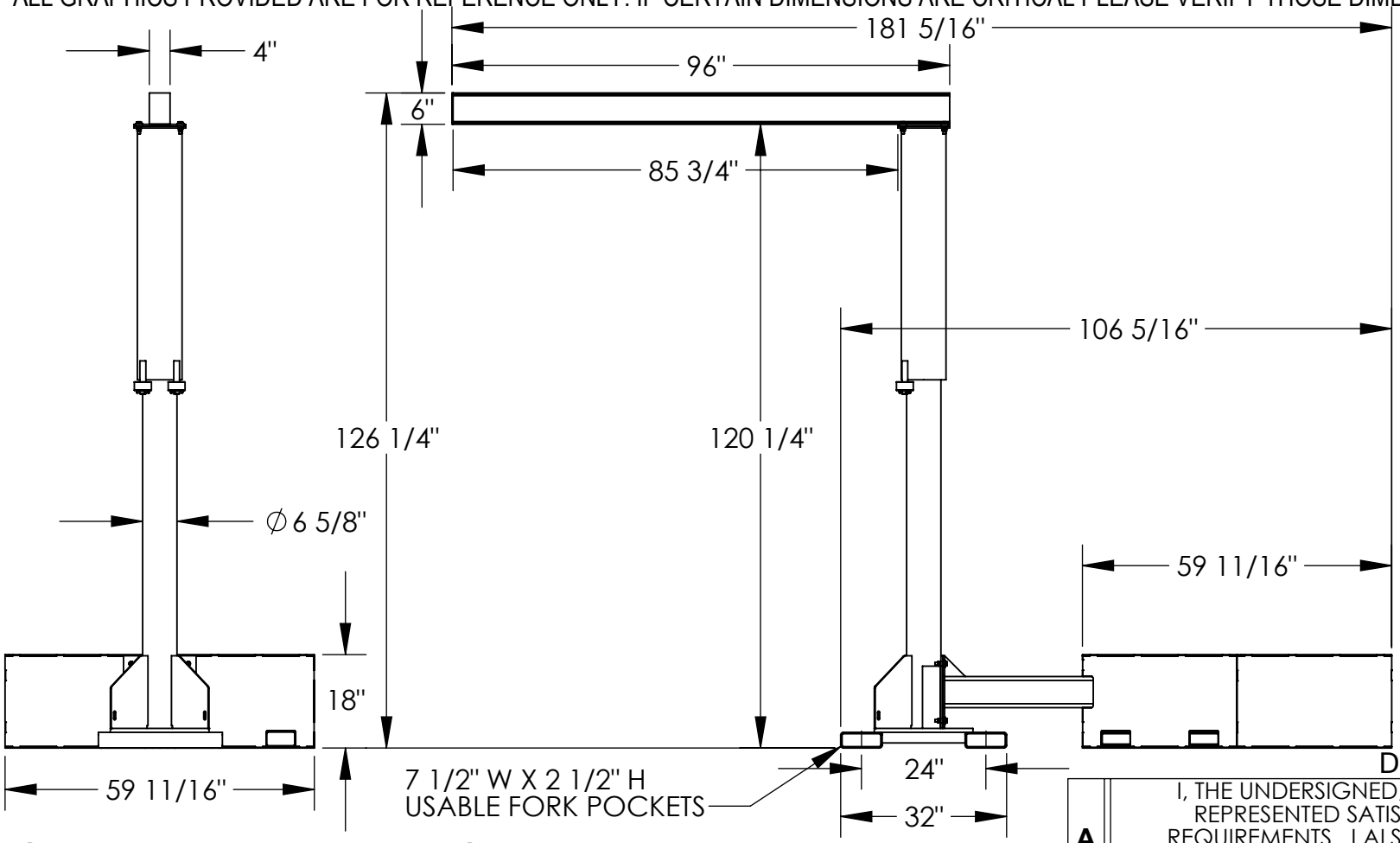

NOTE: UNIT IS FILLED WITH GRAVEL OR LIMESTONE AGGREGATE CONCRETE.

DIMENSION TOLERANCE ± 1/4"

STANDARD FEATURES

MODEL NUMBER IS JIB-CBX-25-8-10-BC
CAPACITY IS 250 LBS.
OVERALL WIDTH IS 59 11/16"
USABLE WIDTH IS 4"
OVERALL LENGTH IS 181 5/16"
OVERALL I-BEAM LENGTH IS 96"
USABLE I-BEAM LENGTH IS 85 3/4"
OVERALL HEIGHT IS 126 1/4"
UNDER I-BEAM HEIGHT IS 120 1/4"
USABLE FORK POCKETS IS:
7 1/2" W X 2 1/2" H W/ 24" FORK CENTERS
OVERALL BASE HEIGHT IS 18"
OVERALL BASE LENGTH IS 106 5/16"
I-BEAM SIZE IS 6" HEIGHT X 4" FLANGE WIDTH
UNIT WEIGHT IS 3,373 LBS. APPROX.
DURABLE LIQUID PAINT BLUE FINISH

SPECIAL FEATURES

NONE

APPROVAL

I, THE UNDERSIGNED, AGREE THAT THE PRODUCT AS REPRESENTED SATISFIES DESIGN AND DIMENSION REQUIREMENTS. I ALSO ACKNOWLEDGE MY DUTY TO CONFIRM PRODUCT AND INSTALLATION COMPLIANCE WITH ALL APPLICABLE FEDERAL, STATE AND LOCAL REGULATIONS AND STANDARDS.

ANY MODIFIED UNITS ARE NON-RETURNABLE

[ ] As drawn [ ] As marked

Signed:_____ Date:_____

Printed Name:_____

LEAD TIME WILL START UPON RECEIPT OF SIGNED APPROVAL DRAWING

FOR INTERNAL USE ONLY PROJECT SIGN OFF	
SALES	
ENG.	
FAB.	
POWER	

DISTRIBUTOR'S NAME: VESTIL MANUFACTURING			P.O.# X
			W.O.# X
DRAWN BY: ND	DATE: 9/19/08		SALES: X
REFERENCE: X		SCALE: 1:32	FILE NAME: 28-007-234-002
QUOTED LEAD TIME: X	QUOTE # X		